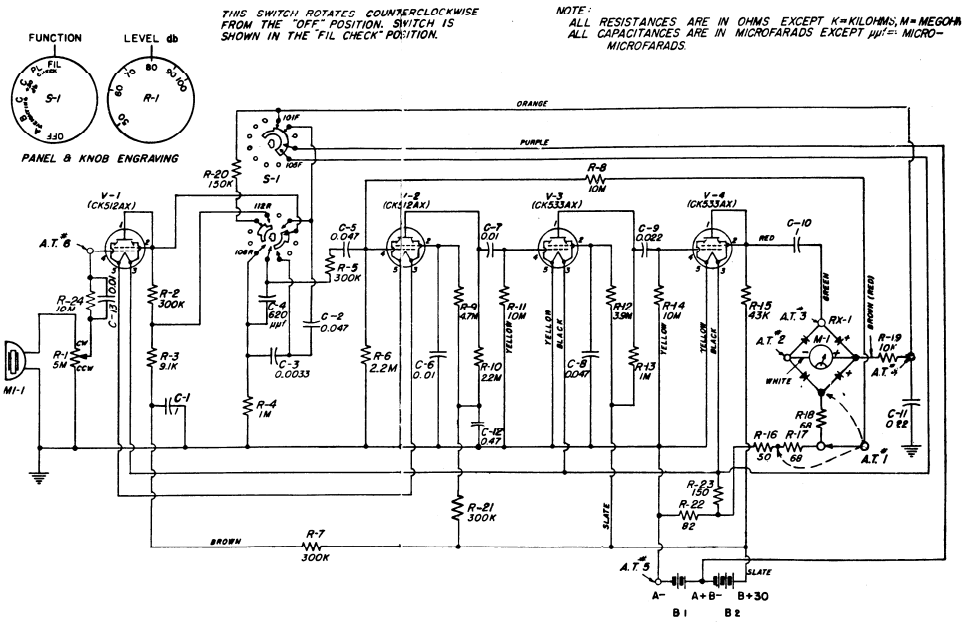

Wiring Diagram for Type 1555-A Sound-Survey Meter

RESISTORS:			TYPE
R-1 =	5 MegΩ	±20%	POSC-21
R-2 =	300 kΩ	± 5%	REC-20BF
R-3 =	9.1 kΩ	± 5%	REC-20BF
R-4 =	1 MegΩ	± 5%	REC-20BF
R-5 =	300 kΩ	± 5%	REC-20BF
R-6 =	2.2 MegΩ	± 5%	REC-20BF
R-7 =	300 kΩ	± 5%	REC-20BF
R-8 =	10 MegΩ	± 5%	REC-20BF
R-9 =	4.7 MegΩ	± 5%	REC-20BF
R-10 =	2.2 MegΩ	± 5%	REC-20BF
R-11 =	10 MegΩ	± 5%	REC-20BF
R-12 =	3.9 MegΩ	± 5%	REC-20BF
R-13 =	1 MegΩ	± 5%	REC-20BF
R-14 =	10 MegΩ	± 5%	REC-20BF
R-15 =	43 kΩ	± 5%	REC-20BF
R-16 =	50 Ω	± 5%	REC-20BF
R-17 =	68 Ω	± 5%	REC-20BF
R-18 =	68 Ω	± 5%	REC-20BF
R-19 =	10 kΩ	± 5%	REC-20BF
R-20 =	150 kΩ	± 5%	REC-20BF
R-21 =	300 kΩ	± 5%	REC-20BF
R-22 =	82 Ω	± 5%	REC-20BF
R-23 =	150 Ω	± 5%	REC-20BF
R-24 =	10 MegΩ	± 5%	REC-20BF
CAPACITORS:			
C-1 =	1 μf	±10%	COW-17
C-2 =	.047 μf	±10%	COW-17
C-3 =	.0033 μf	± 5%	COW-17
C-4 =	620 μμf	± 5%	COM-20B
C-5 =	.047 μf	±10%	COW-17
C-6 =	.01 μf	±10%	COW-17
C-7 =	.01 μf	±10%	COW-17
C-8 =	.047 μf	±10%	COW-17
C-9 =	.022 μf	±10%	COW-17
C-10 =	1 μf	±10%	COW-17
C-11 =	.22 μf	±10%	COW-17
C-12 =	.47 μf	±10%	COW-17
C-13 =	.01 μf	±10%	COW-17